Free Block Patterns

By CompuQuilt.com

www.CompuQuilt.com
PMB 116, 2791F No. Texas St.
Fairfield, California 94533
Phone #: 707-422-1529

July 4th Star

6 inch finished size
paper piecing design

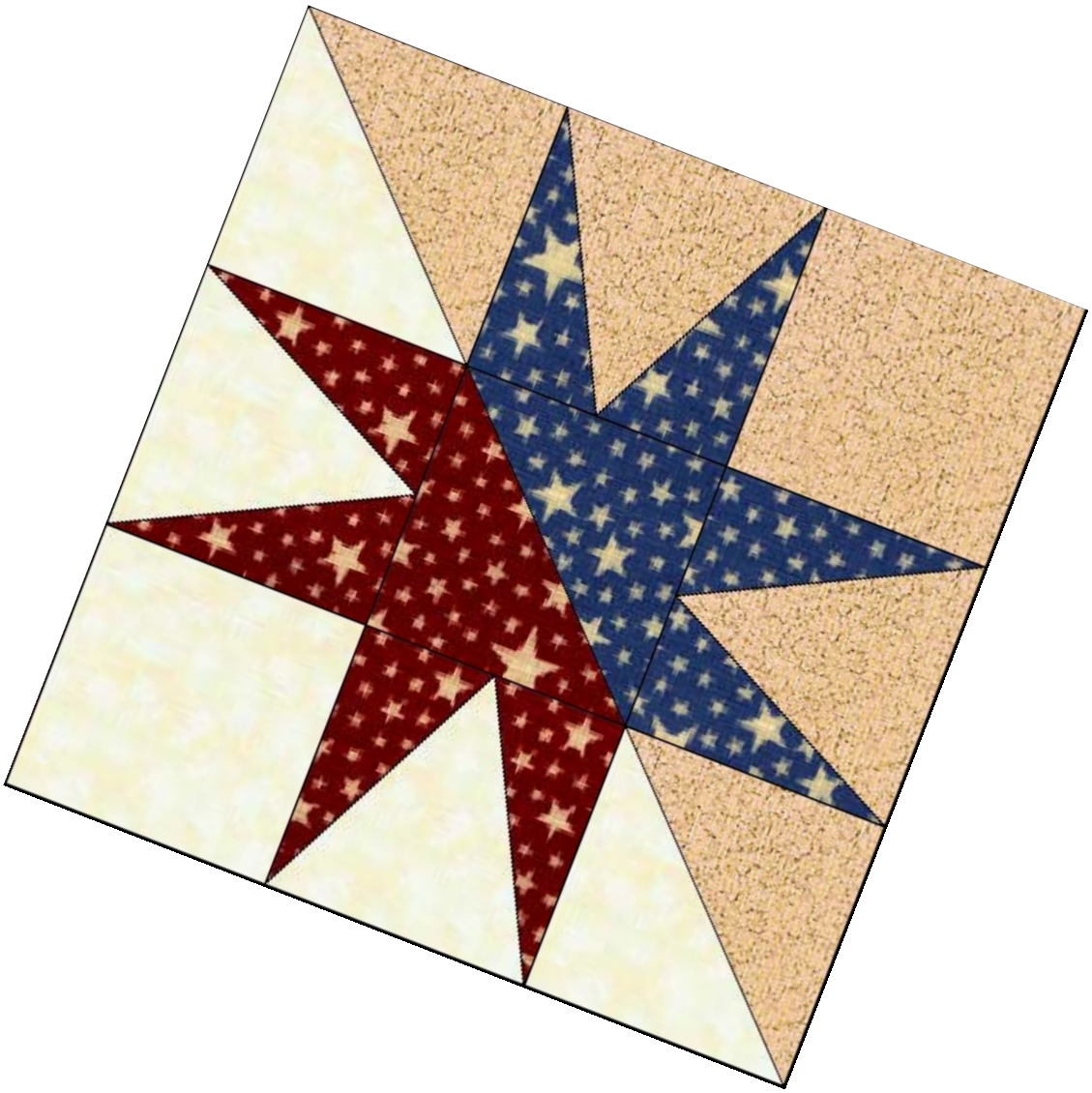

The instructions, images, templates, etc included in this free pattern are copyright 2004 by CompuQuilt and are meant for your personal use only. All other use requires permission. If you'd like others to have these patterns and instructions, please send them a link to www.CompuQuilt.com.

Free Block Patterns

By CompuQuilt.com

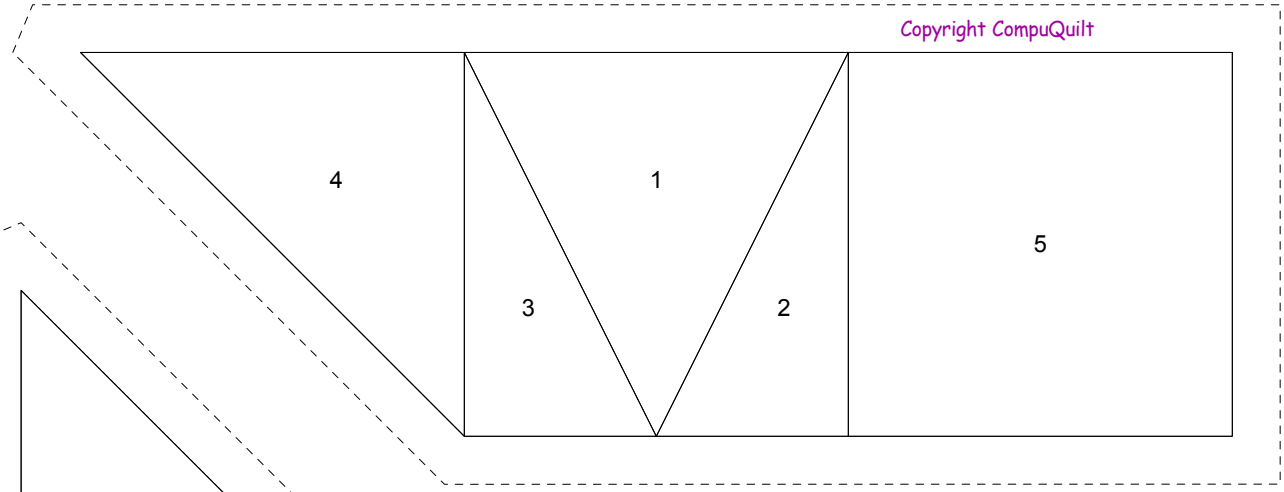

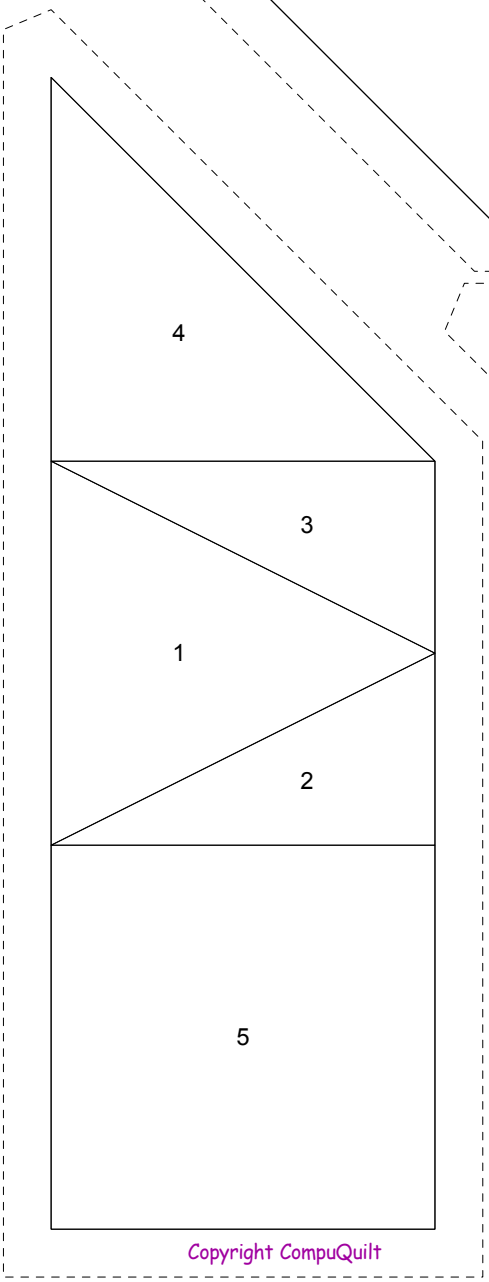

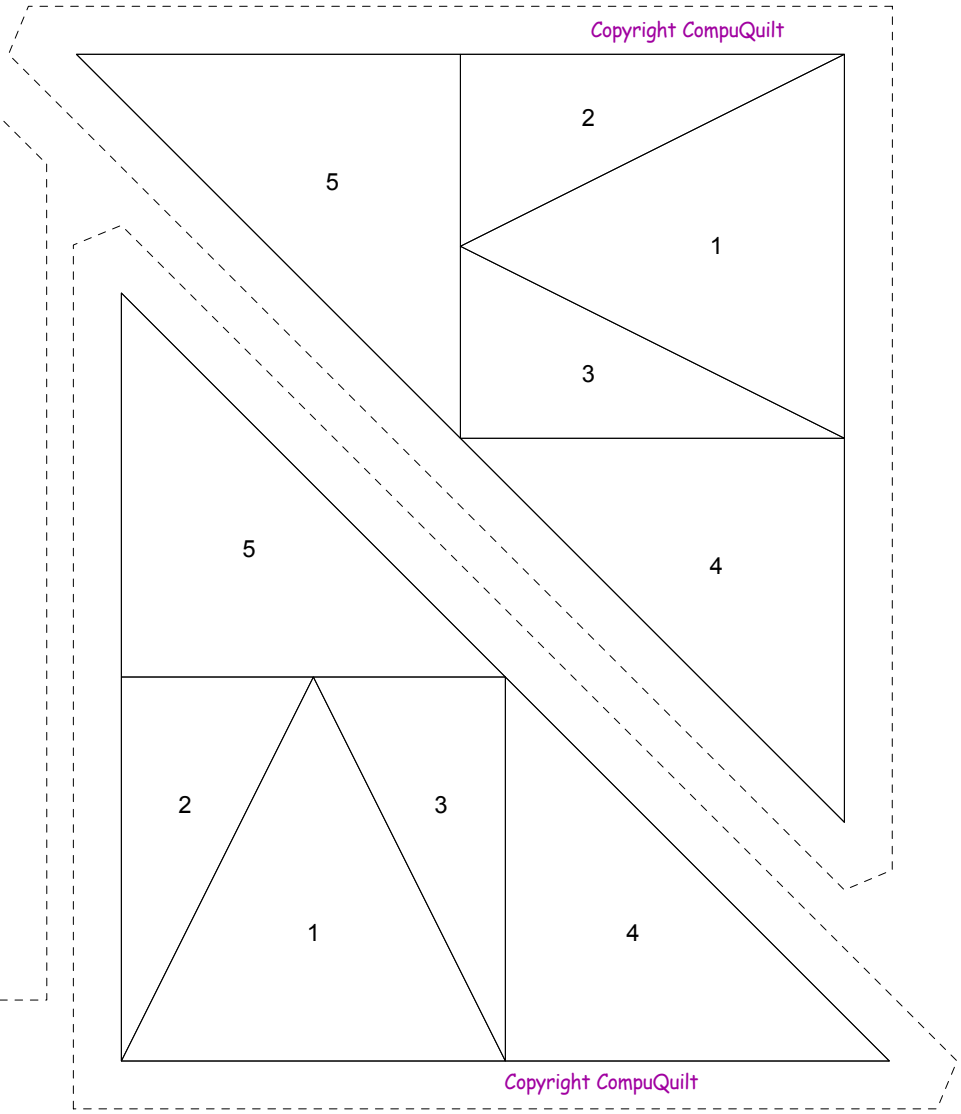

This pattern sheet, instructions and/or images are copyrighted by www.CompuQuilt.com Please do not use this on any other website or in any classroom setting other than a free quilt guild class or for any other commercial use without our express permission. If permission has been granted it will be noted on pattern sheet.